Dynamic Resource Allocation with GMPLS on Optical Networks (DRAGON) Configuration

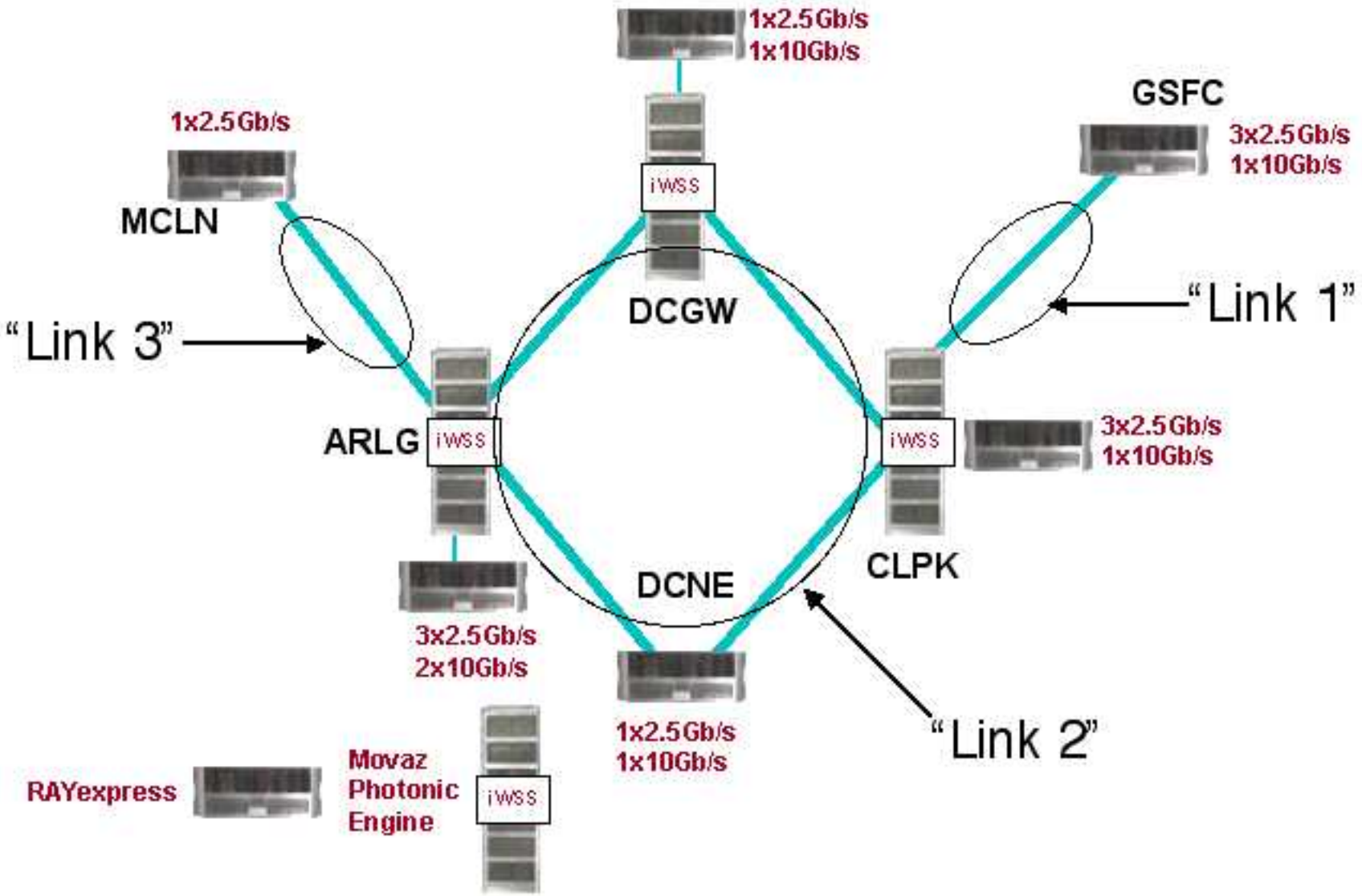

J. P. Gary
09/07/04
1